bar-agturn®

Pneumatic actuator
Type GD/GS

Instructions for the replacement of sealing and wear parts

bar-gmbh.de

bar
A WATTS Brand

Content

1. General information 5

1.1 Scope 5

1.2 Reference documents 5

1.3 Validity of the manual 5

1.4 Notes to operating manual 5

2. Replacement of sealing and wear parts 6

2.1 Removing the cap screws 7

2.2 Removing the cap 7

2.3 Removing the springs 8

2.4 Removal of O-ring and sealing plug 8

2.5 Removing the protective caps 9

2.6 Removing the adjusting screws 9

2.7 Removal of the pistons 9

2.8 Disassembly of piston 10

2.9 Removing the thrust washer 10

2.10 Removing the pinion 11

2.11 Disassembling the pinion 11

1. General information

1.1 Scope

These instructions will help you to replace sealing and wear parts quickly and easily.

This manual does not replace the manual. All safety notes and instructions from the manual have to be followed to ensure a safe functionality and to avoid any harm or danger.

1.2 Reference documents

Reference documents like user manual, operation instruction, maintenance instruction, Device data sheet, certificates, the TÜV Report, the FMEDA Report as well as further information – also in other languages – can be obtained by:

bar pneumatische
Steuerungssysteme GmbH

Auf der Hohl 1
53547 Dattenberg

Tel.: +49 (0)2644-9607-0
Fax: +49 (0)2644-960735

E-Mail: bar-info@wattswater.com
www.bar-gmbh.de

1.3 Validity of the manual

This manual is valid for bar-agturn actuators since year of manufacture 2019:

- Type GD-032 to 040
- Type GD/GS-052 to 400

1.4 Notes to operating manual

The safety and hazard statements in the document are intended for your protection, the protection of third parties and the protection of the product. The instructions must therefore be observed.

1.4.1 Signal words and symbols

⚠ DANGER

... indicates a hazard that, if not avoided, will result in death or serious injury.

⚠ WARNING

...indicates a hazard that, if not avoided, could result in death or serious injury.

⚠ CAUTION

...indicates a hazard which, if not avoided, could result in minor or moderate injury.

⚠ **WARNING**

Assembly work

There is a risk of injury if this product is not properly assembled, disassembled and put into operation.

- Make sure that the personnel have the appropriate training.
- Observe the safety instructions in „Chapter 2. Safety“ of the operating manual.

⚠ **WARNING**

Ejected parts!

When adjusting the rotary actuators and when the rotary actuator is opened under pressure, there is a risk of parts being ejected!

- Always disconnect the compressed air supply before maintenance, disassembly and repair!
- Never set the mechanical end positions on the actuator as long as there is pressure on connection 2 or 4.
- Make sure the pinion of the rotary actuator is moving in the correct direction.

2. Replacement of sealing and wear parts

⚠ **WARNING**

- Never move the pistons of the actuator out of the housing with compressed air.
- Disconnect the connections to the compressed air network before any work is performed on the rotary actuator.
- For single-acting actuators, remove the return springs.
- The circlip must not be overstretched.
- Defective parts must be replaced by original parts.

2.1 Removing the cap screws

First remove a cap of the drive on one side. To do this, loosen the four cap screws crosswise step by step. Otherwise, the cap may tilt due to possibly installed return springs.

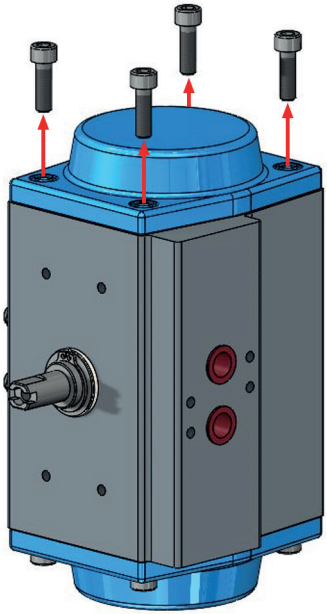

Fig.1 - Removal of cap screws

2.2 Removing the cap

The cap can then be carefully removed.

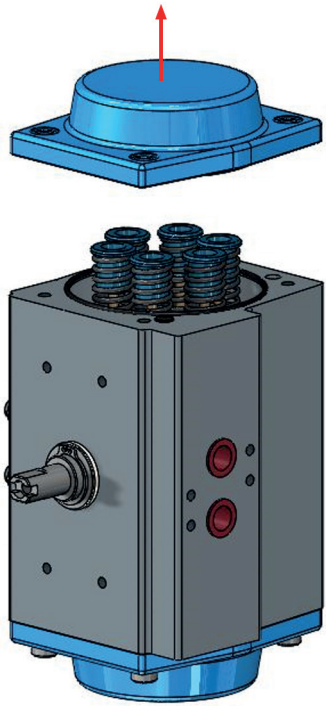

Fig.2 - Removal of cap

2.3 Removing the springs

For single-acting actuators, remove all springs afterwards. This step is not necessary for double-acting actuators.

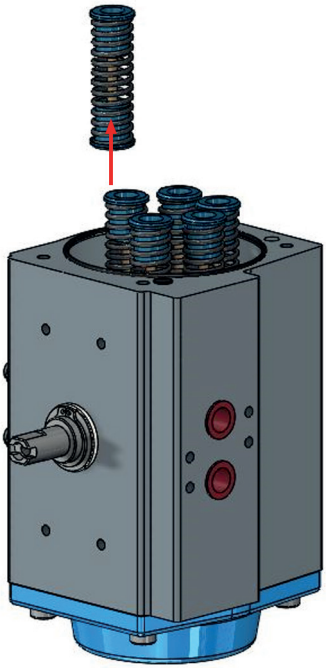

Fig.3 - Remove springs

2.4 Removal of O-ring and sealing plug

Then remove the O-ring and the sealing plug of the air duct.

NOTE

The O-ring could still be in the cap. If so, remove it from the cap.

Then turn the actuator and carry out steps 2.1 to 2.4 on the other side of the second cap.

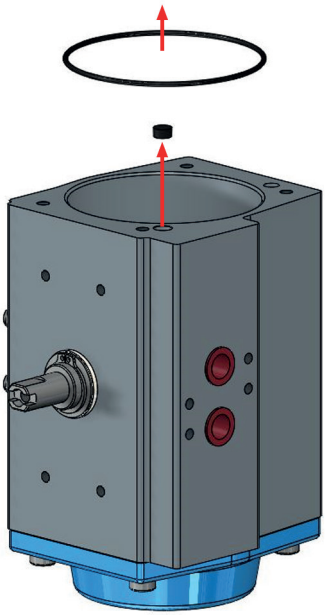

Abb.4 - Removing the O-ring and sealing plug

2.5 Removing the protective caps

In order to ensure the air balance in the inner chamber, you must now remove the red protective caps.

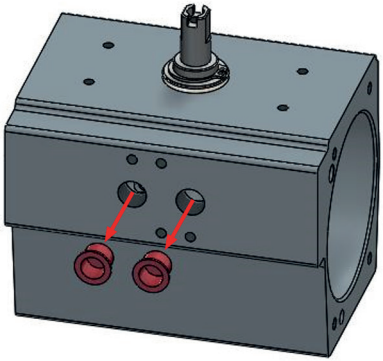

Fig.5 - Remove protective caps

2.6 Removing the adjusting screws

Then remove the outer adjusting screws including nut, washer and O-rings.

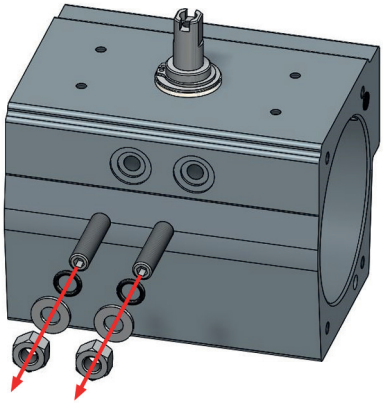

Fig.6 - Remove the adjusting screws

2.7 Removal of the pistons

Then the pistons of the actuator must be removed.

To do this, turn the pinion until the pistons protrude from the housing.

If the pistons are still hanging in the housing afterwards, but the pinion is already rotating freely, you have to help carefully at this point with a screwdriver or pliers.

NOTE

Be especially careful not to damage the piston or the housing.

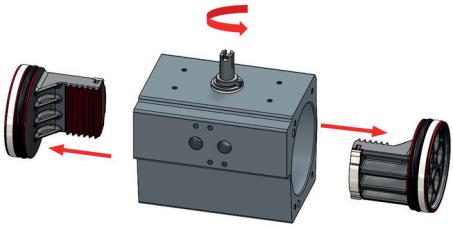

Fig.7 - Removing the piston

2.8 Disassembly of piston

Once the pistons are removed from the housing, it can be disassembled. To do this, remove the piston shoe, the piston guide band and the piston seal.

Make sure that the piston seal is removed from the piston over the side of the pinion rod so that the piston does not have to be guided over the piston guide band.

Then repeat this step for the remaining piston.

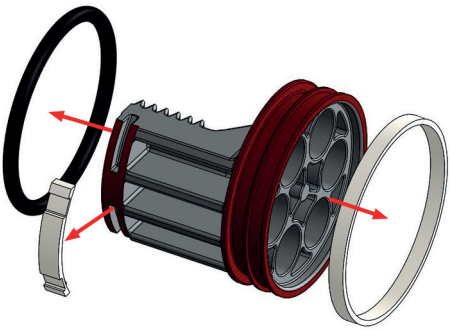

Fig.8 - Disassembling the Piston

2.9 Removing the thrust washer

Then the thrust washer on the drive is removed. For this purpose, the shaft retaining ring and the disc underneath it must first be removed.

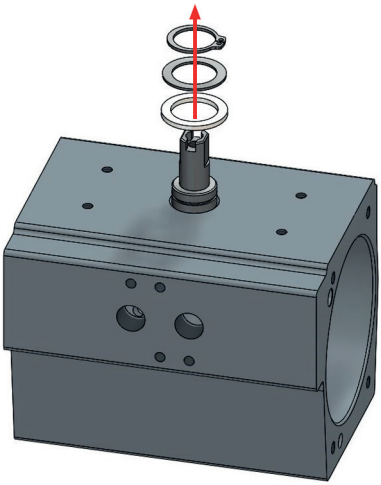

Fig.9 - Remove thrust washer

2.10 Removing the pinion

Now the pinion can be pushed down out of the drive. This also removes the stop cam and the inner thrust washer at the same time.

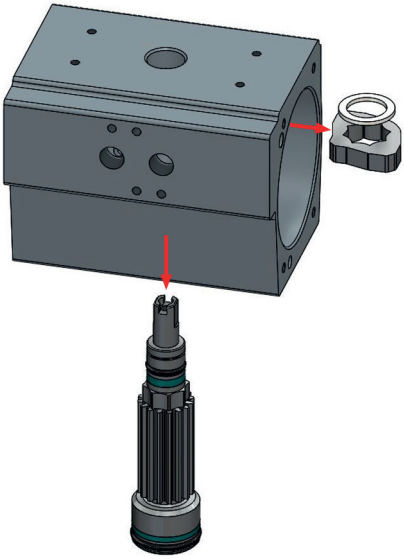

Fig.10 - Pinion removal

2.11 Disassembling the pinion

Once the pinion is removed from the drive, the upper and lower pinion bearings and the two O-rings can be removed for sealing.

Fig.11 - Pinion disassembly

After dismantling the actuator, all sealing and wear parts must be replaced by the respective spare parts. Then reassemble the actuator in reverse order (step 2.11 to step 2.1).

Wear parts sets – Standard		Sealing sets – Standard	
Actuator size	Article number	Actuator size	Article number
GD-032	60103275	GD-032	60103187
GD-040	60103276	GD-040	60103188
GD/GS-052	60103277	GD/GS-052	60103189
GD/GS-063	60103278	GD/GS-063	60103190
GD/GS-075	60103279	GD/GS-075	60103191
GD/GS-083	60103280	GD/GS-083	60103192
GD/GS-092	60103281	GD/GS-092	60103193
GD/GS-105	60103282	GD/GS-105	60103194
GD/GS-125	60103283	GD/GS-125	60103195
GD/GS-140	60103284	GD/GS-140	60103196
GD/GS-160	60103285	GD/GS-160	60103197
GD/GS-190	60103286	GD/GS-190	60103198
GD/GS-210	60103287	GD/GS-210	60103199
GD/GS-240	60103288	GD/GS-240	60103200
GD/GS-270	60103289	GD/GS-270	60103201
GD/GS-300	60103290	GD/GS-300	60103202
GD/GS-350	60103291	GD/GS-350	60103203
GD/GS-400	60103292	GD/GS-400	60103204

Wear parts sets – HT		Sealing sets – HT	
Actuator size	Article number	Actuator size	Article number
GD-032	60103297	GD-032	60103172
GD-040	60103237	GD-040	60103171
GD/GS-052	60103238	GD/GS-052	60103154
GD/GS-063	60103239	GD/GS-063	60103160
GD/GS-075	60103240	GD/GS-075	60103173
GD/GS-083	60103241	GD/GS-083	60103174
GD/GS-092	60103242	GD/GS-092	60103175
GD/GS-105	60103243	GD/GS-105	60103176
GD/GS-125	60103244	GD/GS-125	60103177
GD/GS-140	60103245	GD/GS-140	60103178
GD/GS-160	60103246	GD/GS-160	60103179
GD/GS-190	60103247	GD/GS-190	60103180
GD/GS-210	60103248	GD/GS-210	60103181
GD/GS-240	60103249	GD/GS-240	60103182
GD/GS-270	60103250	GD/GS-270	60103183
GD/GS-300	60103251	GD/GS-300	60103184
GD/GS-350	60103252	GD/GS-350	60103185
GD/GS-400	60103253	GD/GS-400	60103186

Wear parts sets – TT		Sealing sets – TT	
Actuator size	Article number	Actuator size	Article number
GD-032	60103297	GD-032	60103205
GD-040	60103237	GD-040	60103206
GD/GS-052	60103238	GD/GS-052	60103207
GD/GS-063	60103239	GD/GS-063	60103208
GD/GS-075	60103240	GD/GS-075	60103209
GD/GS-083	60103241	GD/GS-083	60103210
GD/GS-092	60103242	GD/GS-092	60103211
GD/GS-105	60103243	GD/GS-105	60103212
GD/GS-125	60103244	GD/GS-125	60103213
GD/GS-140	60103245	GD/GS-140	60103214
GD/GS-160	60103246	GD/GS-160	60103215
GD/GS-190	60103247	GD/GS-190	60103216
GD/GS-210	60103248	GD/GS-210	60103217
GD/GS-240	60103249	GD/GS-240	60103218
GD/GS-270	60103250	GD/GS-270	60103219
GD/GS-300	60103251	GD/GS-300	60103220
GD/GS-350	60103252	GD/GS-350	60103221
GD/GS-400	60103253	GD/GS-400	60103222

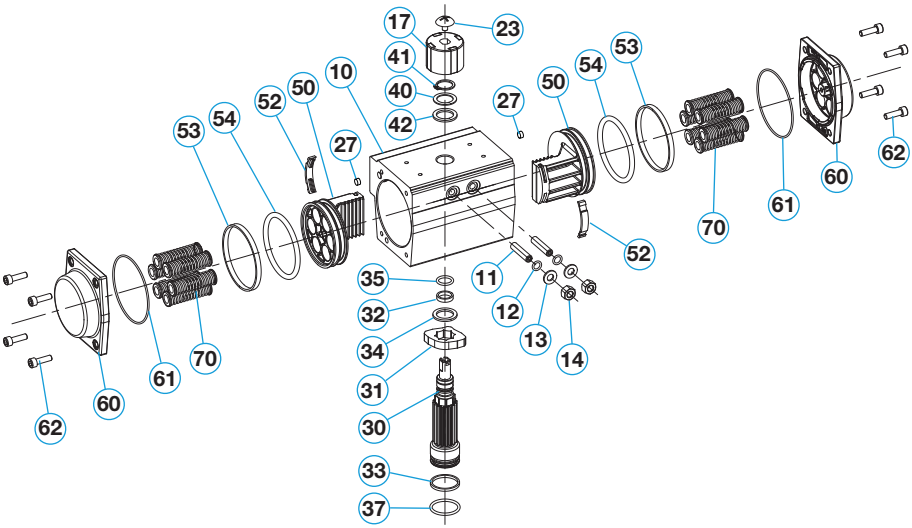

Fig.12 - Exploded-view drawing of all individual components of rotary actuator bar-agturn

10	Casing	30	Pinion	50	Piston
11	Stop screw	31	Stop cam	52	Guiding shoe
12	Seal of stop screw	32	Upper pinion bearing	53	Guiding ring
13	Washer	33	Lower pinion bearing	54	Piston seal
14	Lock nut	34	Inner thrust washer	60	Cap
17	Position indicator	35	Upper pinion seal	61	Cap seal
23	Fixing screw to position indicator	37	Lower pinion seal	62	Cap screw
25	Ring nut	40	Supporting ring	70	Spring
26	Plastic washer	41	Lock washer		
27	Sealing plug channel 4	42	Outer thrust washer		

- Sealing set 032 consists of: 35, 37, 54, 61
- Sealing set 040-300 consists of: 12, 27, 35, 37, 54, 61
- Sealing set 350-400 consists of: 12, 27, 35, 37, (2x)54, 61
- Wear parts set 032 consists of: 34, 42
- Wear parts set 040 consists of: 32, 33, 34, 42, 52
- Wear parts set 050-300 consists of: 32, 33, 34, 42, 52, 53
- Wear parts set 350-400 consists of: 32, 33, 34, 42, 52, (2x)53

The bar products are comprehensively tested. The company bar therefore only guarantees the replacement or - at its sole discretion - the free repair of those components of the delivered products which, in the opinion of bar, have demonstrable manufacturing defects. Warranty claims due to defects or defects of title can be asserted within one (1) year from delivery/transfer of risk. Excluded from the warranty are damages due to normal product use or friction as well as damages due to changes or unauthorized repairs to the products for which bar rejects any claim for damages (direct or indirect). (Please refer to our website for detailed information.) All deliveries are subject to the General Conditions of Sale which can be found at www.bar-gmbh.de.

The descriptions and images contained in this product data sheet are for informational purposes only and are not guaranteed. bar GmbH reserves the right to make technical and constructive changes to its products without prior notice.

Warranty: All purchases and sales contracts expressly require the Purchaser to accept the General Terms and Conditions of Sale and Delivery which can be found on www.bar-gmbh.de/agb. bar GmbH hereby objects to any deviating or additional condition to the General Terms and Conditions of Sale and Delivery which has been communicated to the Purchaser in any form without the written consent of a representative of bar GmbH.

---

bar

A WATTS Brand

bar pneumatische Steuerungssysteme GmbH
Auf der Hohl 1 • 53547 Dattenberg • Deutschland
Tel. +49 (0)2644 96070 • Fax +49 (0)2644 960735
bar-info@wattswater.com • www.bar-gmbh.de

© 2020 Watts